Filtragem ótima

Antonio M.N. Lima

DEE/CEEI/UFCG

August 8, 2023

Estimação de estados

$$\mathbf{x}_{[n+1]} = \mathbf{A}\mathbf{x}_{[n]} + \mathbf{B}\mathbf{u}_{[n]} + \mathbf{w}_{[n]},$$

$$\mathbf{x}_{[0]} = \mathbf{x}_0,$$

$$\mathbf{y}_{[n]} = \mathbf{C}\mathbf{x}_{[n]} + \mathbf{v}_{[n]},$$

⇨ Caso linear

Utilizando os sinais de saída que estão contaminados por sinais de ruído aleatórios, os sinais de entrada e as matrizes **A**, **B**, **C**, **Q** e **R** é possível fornecer uma estimativa razoável para $\mathbf{x}[n]$?

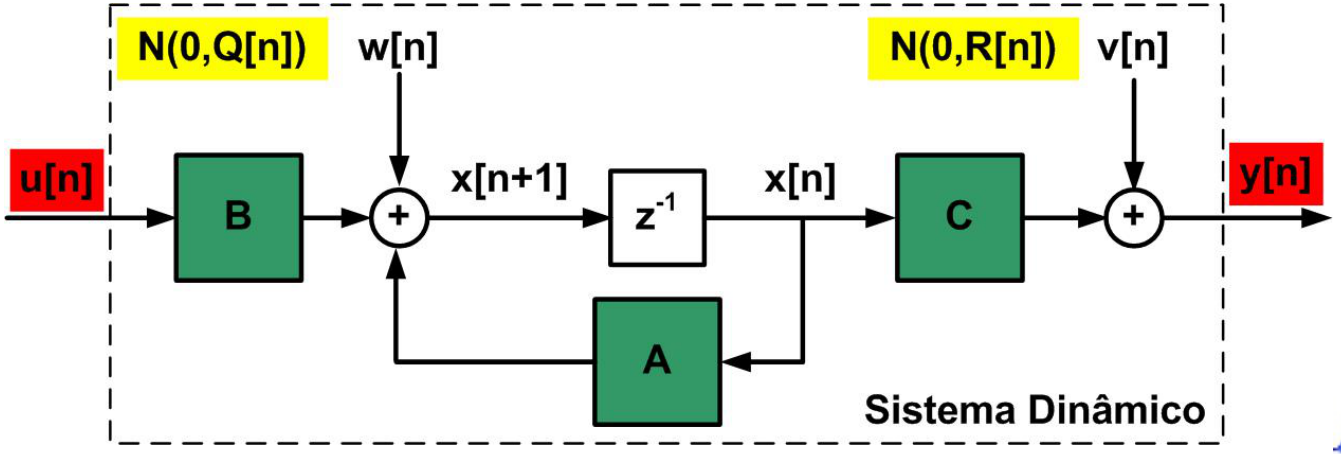

Caracterização dos ruídos

$$\mathbf{w}_{[n]} \in N(0, \mathbf{Q}_{[n]}), \mathbf{v}_{[n]} \in N(0, \mathbf{R}_{[n]}),$$

$$\mathbf{Q}_{[n]} = \mathbf{Q}_{[n]}^T = \text{cov}\left(\mathbf{w}_{[n]}\right), \mathbf{R}_{[n]} = \mathbf{R}_{[n]}^T = \text{cov}\left(\mathbf{v}_{[n]}\right).$$

$$\mathbf{Q}_{[n]} = \mathrm{E}\left\{\left(\mathbf{w}_{[n]} - \underbrace{\mathrm{E}\left\{\mathbf{w}_{[n]}\right\}}_{=0}\right)\left(\mathbf{w}_{[n]} - \underbrace{\mathrm{E}\left\{\mathbf{w}_{[n]}\right\}}_{=0}\right)^T\right\},$$

$$\mathbf{R}_{[n]} = \mathrm{E}\left\{\left(\mathbf{v}_{[n]} - \underbrace{\mathrm{E}\left\{\mathbf{v}_{[n]}\right\}}_{=0}\right)\left(\mathbf{v}_{[n]} - \underbrace{\mathrm{E}\left\{\mathbf{v}_{[n]}\right\}}_{=0}\right)^T\right\},$$

$$f\left(\mathbf{w}\right) = (2\pi)^{-\frac{p}{2}} \left\|\mathbf{Q}\right\|^{-\frac{1}{2}} e^{\left(-\frac{1}{2}(\mathbf{w}-\mathbf{m_w})\mathbf{Q}^{-1}(\mathbf{w}-\mathbf{m_w})\right)}$$

$$g\left(\mathbf{v}\right) = (2\pi)^{-\frac{p}{2}} \left\|\mathbf{R}\right\|^{-\frac{1}{2}} e^{\left(-\frac{1}{2}(\mathbf{v}-\mathbf{m_v})\mathbf{R}^{-1}(\mathbf{v}-\mathbf{m_v})\right)}$$

$$\mathrm{E}\left\{\mathbf{w}\right\} = \int_{-\infty}^{+\infty} \mathbf{w} f\left(\mathbf{w}\right) d\mathbf{w}, \mathrm{E}\left\{\mathbf{v}\right\} = \int_{-\infty}^{+\infty} \mathbf{v} g\left(\mathbf{v}\right) d\mathbf{v}$$

Caracterização dos ruídos ...

$$\mathbf{w}_{[n]} \in \mathbb{R}^p, \mathbf{v}_{[n]} \in \mathbb{R}^q$$

$$\mathbf{w}_{[n]} = \begin{bmatrix} w_1 & w_2 & \cdots & w_p \end{bmatrix}^T$$

$$\mathbf{v}_{[n]} = \begin{bmatrix} v_1 & v_2 & \cdots & v_q \end{bmatrix}^T$$

$$f(\mathbf{w}) = (2\pi)^{-\frac{p}{2}} \|\mathbf{Q}\|^{-\frac{1}{2}} e^{\left(-\frac{1}{2}(\mathbf{w}-\mathbf{m_w})\mathbf{Q}^{-1}(\mathbf{w}-\mathbf{m_w})\right)}$$

$$g(\mathbf{v}) = (2\pi)^{-\frac{p}{2}} \|\mathbf{R}\|^{-\frac{1}{2}} e^{\left(-\frac{1}{2}(\mathbf{v}-\mathbf{m_v})\mathbf{R}^{-1}(\mathbf{v}-\mathbf{m_v})\right)}$$

$$\mathrm{E}\{\mathbf{w}\} = \int_{-\infty}^{+\infty} \mathbf{w} f(\mathbf{w})\, d\mathbf{w}, \mathrm{E}\{\mathbf{v}\} = \int_{-\infty}^{+\infty} \mathbf{v} g(\mathbf{v})\, d\mathbf{v}$$

$$\mathbf{m_w} = \mathrm{E}\{\mathbf{w}\} = \mathbf{m_v} = \mathrm{E}\{\mathbf{v}\} = \mathbf{0},$$

$$\mathbf{Q} = \mathrm{E}\left\{(\mathbf{w}-\mathbf{m_w})(\mathbf{w}-\mathbf{m_w})^T\right\}, \mathbf{R} = \mathrm{E}\left\{(\mathbf{v}-\mathbf{m_v})(\mathbf{v}-\mathbf{m_v})^T\right\}$$

$$\dim(\mathbf{Q}) = p \times p, \dim(\mathbf{R}) = q \times q$$

Propriedades da covariancia

$$\sum = \mathrm{E}\left[(\mathbf{x} - \mathrm{E}[\mathbf{x}])\,(\mathbf{x} - \mathrm{E}[\mathbf{x}])^{\mathrm{T}}\right]$$

$$\boldsymbol{\mu} = \mathrm{E}(\mathbf{x})$$

$$\mathbf{x}, \mathbf{x}_1, \mathbf{x}_2, \mathbf{b} \in \mathbb{R}^p; \mathbf{y}, \mathbf{a} \in \mathbb{R}^q; \mathbf{A}, \mathbf{B} \in \mathbb{R}^{q \times p}$$

1. $\sum = \mathrm{E}(\mathbf{x}\mathbf{x}^{\mathrm{T}}) - \boldsymbol{\mu}\boldsymbol{\mu}^{\mathrm{T}}$, $\sum$ é positiva semi-definida, i.e., $\mathbf{x}^T \sum \mathbf{x} \geq \mathbf{0}$, $\forall \mathbf{x} \in \mathbb{R}^{\mathbf{p}}$ e simétrica. i.e., $\sum = \sum^T$
2. $\mathrm{cov}(\mathbf{A}\mathbf{x} + \mathbf{a}) = \mathbf{A}\,\mathrm{cov}(\mathbf{x})\,\mathbf{A}^{\mathrm{T}}$
3. $\mathrm{cov}(\mathbf{x}, \mathbf{y}) = \mathrm{cov}(\mathbf{y}, \mathbf{x})^{\mathrm{T}}$
4. $\mathrm{cov}(\mathbf{x}_1 + \mathbf{x}_2, \mathbf{y}) = \mathrm{cov}(\mathbf{x}_1, \mathbf{y}) + \mathrm{cov}(\mathbf{x}_2, \mathbf{y})$
5. Se $p = q$, então
   $\mathrm{var}(\mathbf{x} + \mathbf{y}) = \mathrm{var}(\mathbf{x}) + \mathrm{cov}(\mathbf{x}, \mathbf{y}) + \mathrm{cov}(\mathbf{y}, \mathbf{x}) + \mathrm{var}(\mathbf{y})$.
   $\mathrm{var}(\mathbf{x}) = \mathrm{cov}(\mathbf{x}, \mathbf{x})$.
6. $\mathrm{cov}(\mathbf{A}\mathbf{x} + \mathbf{a}, \mathbf{B}^{\mathrm{T}}\mathbf{y} + \mathbf{b}) = \mathbf{A}\,\mathrm{cov}(\mathbf{x}, \mathbf{y})\,\mathbf{B}$
7. Se $\mathbf{x}$ e $\mathbf{y}$ são independentes ou não-correlacionados, então $\mathrm{cov}(\mathbf{x}, \mathbf{y}) = \mathbf{0}$

AMNLIMA

Estimação de Estados: solução

Se dispusermos de uma estimativa inicial do estado $\hat{\mathbf{x}}_{[n|n-1]}$ é possível corrigi-la da seguinte maneira

$$\boxed{\hat{\mathbf{x}}_{[n|n]} = \hat{\mathbf{x}}_{[n|n-1]} + \mathbf{k}\left(\underbrace{\mathbf{y}_{[n]}}_{=\mathbf{C}\mathbf{x}_{[n]}} - \mathbf{C}\hat{\mathbf{x}}_{[n|n-1]}\right)}.$$

O ganho $\mathbf{k}$ deve ser escolhido de acordo com a qualidade da estimativa, ou seja:

1. Se $\hat{\mathbf{x}}_{[n|n-1]}$ é uma boa estimativa então $\mathbf{k}$ deve ser pequeno;
2. Se $\hat{\mathbf{x}}_{[n|n-1]}$ não é uma estimativa então $\mathbf{k}$ deve ser grande.

Na Filtragem Estocástica Ótima o critério de escolha de $\mathbf{k}$ é a minimização da variância do erro de estimação de estado, i.e.,

$$\mathbf{K} = \arg\min_{\mathbf{k}} \left[\operatorname{cov}\left\{\underbrace{\mathbf{x}_{[n]} - \hat{\mathbf{x}}_{[n|n]}}_{\tilde{\mathbf{x}}_{[n|n]}}\right\}\right]$$

Atualização da covariancia

$$\mathbf{P}_{[n|n]} = \text{cov}\left\{\underbrace{\mathbf{x}_{[n]} - \hat{\mathbf{x}}_{[n|n]}}\right\}$$

$$\mathbf{P}_{[n|n]} = \text{cov}\left\{\tilde{\mathbf{x}}_{[n|n]}\right\}$$

$$\mathbf{P}_{[n|n]} = \mathbf{P}_{[n|n]}^{T}$$

$$\mathbf{P}_{[n|n]} = \text{cov}\left\{\mathbf{x}_{[n]} - \underbrace{\left(\hat{\mathbf{x}}_{[n|n-1]} + \mathbf{k}\left(\mathbf{y}_{[n]} - \hat{\mathbf{y}}_{[n|n-1]}\right)\right)}_{\mathbf{y}_{[n]}=\mathbf{C}\mathbf{x}_{[n]}+\mathbf{v}_{[n]},\hat{\mathbf{y}}_{[n]}=\mathbf{C}\hat{\mathbf{x}}_{[n]}}\right\}$$

$$\mathbf{P}_{[n|n]} = \text{cov}\left\{\mathbf{x}_{[n]} - (\mathbf{I} - \mathbf{k}\mathbf{C})\,\hat{\mathbf{x}}_{[n|n-1]} - \mathbf{k}\mathbf{C}\mathbf{x}_{[n]} - \mathbf{k}\mathbf{v}_{[n]}\right\}$$

$$\mathbf{P}_{[n|n]} = \text{cov}\left\{(\mathbf{I} - \mathbf{k}\mathbf{C})\,\mathbf{x}_{[n]} - (\mathbf{I} - \mathbf{k}\mathbf{C})\,\hat{\mathbf{x}}_{[n|n-1]} - \mathbf{k}\mathbf{v}_{[n]}\right\}$$

$$\mathbf{P}\,[n|n] = \text{cov}\left\{(\mathbf{I} - \mathbf{k}\mathbf{C})\left(\mathbf{x}_{[n]} - \hat{\mathbf{x}}_{[n|n-1]}\right) - \mathbf{k}\mathbf{v}_{[n]}\right\}$$

$$\mathbf{P}_{[n|n]} = \text{cov}\left\{(\mathbf{I} - \mathbf{k}\mathbf{C})\,\tilde{\mathbf{x}}_{[n|n-1]} - \mathbf{k}\mathbf{v}_{[n]}\right\}$$

Atualização da covariancia ...

$$\mathbf{P}_{[n|n]} = \text{cov}\left\{\left(\mathbf{I} - \mathbf{kC}\right)\tilde{\mathbf{x}}_{[n|n-1]} - \mathbf{kv}_{[n]}\right\}$$

$$\mathbf{P}_{[n|n]} = \text{cov}\left\{\left(\mathbf{I} - \mathbf{kC}\right)\tilde{\mathbf{x}}_{[n|n-1]}\right\} + \text{cov}\left\{\mathbf{kv}_{[n]}\right\}$$

$$\text{cov}\left\{\left(\mathbf{I} - \mathbf{kC}\right)\tilde{\mathbf{x}}_{[n|n-1]}\right\} = \left(\mathbf{I} - \mathbf{kC}\right)\text{cov}\left\{\tilde{\mathbf{x}}_{[n|n-1]}\right\}\left(\mathbf{I} - \mathbf{kC}\right)^T$$

$$\text{cov}\left\{\mathbf{kv}\left[n\right]\right\} = \mathbf{k}\text{cov}\left(\mathbf{v}\left[n\right]\right)\mathbf{k}^T$$

$$\mathbf{P}_{[n|n]} = \left(\mathbf{I} - \mathbf{kC}\right)\mathbf{P}_{[n|n-1]}\left(\mathbf{I} - \mathbf{kC}\right)^T + \mathbf{kR}_{[n]}\mathbf{k}^T$$

$$\mathbf{K} = \arg\min_{\mathbf{k}}\left[\underbrace{\text{cov}\left\{\mathbf{x}_{[n]} - \hat{\mathbf{x}}_{[n|n]}\right\}}_{(\mathbf{I}-\mathbf{kC})\mathbf{P}_{[n|n-1]}(\mathbf{I}-\mathbf{kC})^T+\mathbf{kR}_{[n]}\mathbf{k}^T}\right]$$

Ganho ótimo

$$\mathbf{K} = \arg\min_{\mathbf{k}} \mathbf{P}_{[n|n]}$$

$$\mathbf{P}_{[n|n]} = (\mathbf{I} - \mathbf{k}\mathbf{C})\,\mathbf{P}_{[n|n-1]}\,(\mathbf{I} - \mathbf{k}\mathbf{C})^T + \mathbf{k}\mathbf{R}_{[n]}\mathbf{k}^T$$

$$\mathbf{L}_{[n|n]} = \mathrm{tr}\left(\mathbf{P}_{[n|n]}\right)$$

$$\mathbf{K}_{[n]} = \arg\min_{\mathbf{k}} \mathbf{L}_{[n|n]}$$

$$\frac{\partial \mathbf{L}_{[n|n]}}{\partial \mathbf{k}} = -2\left(\mathbf{C}\mathbf{P}_{[n|n-1]}\right)^T + 2\mathbf{k}\left(\mathbf{C}\mathbf{P}_{[n|n-1]}\mathbf{C}^T + \mathbf{R}_{[n]}\right)$$

$$\frac{\partial^2 \mathbf{L}_{[n|n]}}{\partial^2 \mathbf{k}} = 2\left(\mathbf{C}^T\mathbf{P}_{[n|n-1]}\mathbf{C} + \mathbf{R}_{[n]}\right) > 0$$

Traço

$$\mathbf{M} \in \mathbb{R}^{n \times n}, \mathbf{x} \in \mathbb{R}^{n}$$

$$\mathrm{tr}(\mathbf{M}) = m_{11} + m_{22} + \cdots + m_{nn} = \sum_{i=1}^{n} m_{ii}$$

$$\frac{\partial \mathrm{tr}\left(\mathbf{M}\mathbf{x}\right)}{\partial \mathbf{x}} = \mathrm{tr}\left(\frac{\partial\left(\mathbf{M}\mathbf{x}\right)}{\partial \mathbf{x}}\right)$$

$$\frac{\partial\left(\mathbf{x}^{T}\mathbf{M}\mathbf{x}\right)}{\partial \mathbf{x}} = \mathbf{x}^{T}\left(\mathbf{M} + \mathbf{M}^{T}\right)$$

$$\frac{\partial\left(\mathbf{x}^{T}\mathbf{M}\right)}{\partial \mathbf{x}} = \frac{\partial\left(\mathbf{M}^{T}\mathbf{x}\right)}{\partial \mathbf{x}} = \mathbf{M}$$

Derivada do traço

$$\frac{\partial \mathrm{tr}\left(\mathbf{P}_{[n|n]}\right)}{\partial \mathbf{k}} = \mathrm{tr}\left(\frac{\partial\left(\mathbf{P}_{[n|n]}\right)}{\partial \mathbf{k}}\right)$$

$$\mathbf{P}_{[n|n]} = \left(\mathbf{I} - \mathbf{k}\mathbf{C}\right)\mathbf{P}_{[n|n-1]}\left(\mathbf{I} - \mathbf{k}\mathbf{C}\right)^T + \mathbf{k}\mathbf{R}_{[n]}\mathbf{k}^T$$

$$\underbrace{\left(\mathbf{I} - \mathbf{k}\mathbf{C}\right)\mathbf{P}_{[n|n-1]}\left(\mathbf{I} - \mathbf{k}\mathbf{C}\right)^T}_{\mathbf{P}_{[n|n-1]} - \mathbf{k}\mathbf{C}\mathbf{P}_{[n|n-1]} - \mathbf{P}_{[n|n-1]}\mathbf{C}^T\mathbf{k}^T + \mathbf{k}\mathbf{C}\mathbf{P}_{[n|n-1]}\mathbf{C}^T\mathbf{k}^T}$$

$$\frac{\partial \mathbf{P}_{[n|n]}}{\partial \mathbf{k}} = \underbrace{\frac{\partial\left[\left(\mathbf{I} - \mathbf{k}\mathbf{C}\right)\mathbf{P}_{[n|n-1]}\left(\mathbf{I} - \mathbf{k}\mathbf{C}\right)^T\right]}{\partial \mathbf{k}}} + \underbrace{\frac{\partial\left[\mathbf{k}\mathbf{R}_{[n]}\mathbf{k}^T\right]}{\partial \mathbf{k}}}$$

$$\mathbf{P}_{[n|n-1]} + \mathbf{P}_{[n|n-1]}^T = 2\mathbf{P}_{[n|n-1]}$$

$$\mathbf{R}_{[n]} + \mathbf{R}_{[n]}^T = 2\mathbf{R}_{[n]}$$

Ganho

$$-2\left(\mathbf{C}\mathbf{P}_{[n|n-1]}\right)^T + 2\mathbf{k}\left(\mathbf{C}\mathbf{P}_{[n|n-1]}\mathbf{C}^T + \mathbf{R}_{[n]}\right) = \mathbf{0}$$

$$\boxed{\mathbf{K}_{[n]} = \mathbf{P}^T_{[n|n-1]}\mathbf{C}^T\left(\mathbf{C}\mathbf{P}_{[n|n-1]}\mathbf{C}^T + \mathbf{R}_{[n]}\right)^{-1}}$$

$$\mathbf{P}_{[n|n]} = \mathbf{P}_{[n|n-1]} - \mathbf{k}\mathbf{C}\mathbf{P}_{[n|n-1]} - \mathbf{P}_{[n|n-1]}\mathbf{C}^T\mathbf{k}^T + \mathbf{k}\left(\mathbf{C}\mathbf{P}_{[n|n-1]}\mathbf{C}^T + \mathbf{R}_{[n]}\right)\mathbf{k}^T$$

$$\left(\mathbf{C}\mathbf{P}_{[n|n-1]}\right)^T = \mathbf{P}^T_{[n|n-1]}\mathbf{C}^T = \mathbf{K}_{[n]}\left(\mathbf{C}\mathbf{P}_{[n|n-1]}\mathbf{C}^T + \mathbf{R}_{[n]}\right)$$

$$\boxed{\mathbf{P}_{[n|n]} = \mathbf{P}_{[n|n-1]} - \mathbf{K}_{[n]}\mathbf{C}\mathbf{P}_{[n|n-1]}}$$

Previsão

$$\mathbf{P}_{[n+1|n]} = \text{cov}\left\{\mathbf{x}_{[n+1]} - \hat{\mathbf{x}}_{[n+1|n]}\right\}$$

$$\mathbf{x}_{[n+1]} = \mathbf{A}\mathbf{x}_{[n]} + \mathbf{B}\mathbf{u}_{[n]} + \mathbf{w}_{[n]}$$

$$\boxed{\hat{\mathbf{x}}_{[n+1|n]} = \mathbf{A}\hat{\mathbf{x}}_{[n|n]} + \mathbf{B}\mathbf{u}_{[n]}}$$

$$\mathbf{P}_{[n+1|n]} = \text{cov}\left\{\mathbf{A}\left(\mathbf{x}_{[n]} - \hat{\mathbf{x}}_{[n|n]}\right) - \mathbf{w}_{[n]}\right\}$$

$$\mathbf{P}_{[n+1|n]} = \text{cov}\left\{\mathbf{A}\left(\mathbf{x}_{[n]} - \hat{\mathbf{x}}_{[n|n]}\right)\right\} + \text{cov}\left\{\mathbf{w}_{[n]}\right\}$$

$$\mathbf{P}_{[n+1|n]} = \mathbf{A}\text{cov}\left\{\mathbf{x}_{[n]} - \hat{\mathbf{x}}_{[n|n]}\right\}\mathbf{A}^T + \mathbf{Q}_{[n]}$$

$$\mathbf{P}_{[n|n]} = \text{cov}\left\{\mathbf{x}_{[n]} - \hat{\mathbf{x}}_{[n|n]}\right\}$$

$$\boxed{\mathbf{P}_{[n+1|n]} = \mathbf{A}\mathbf{P}_{[n|n]}\mathbf{A}^T + \mathbf{Q}_{[n]}}$$

Algoritmo linear - $\hat{\mathbf{x}}_{[1|0]}, \mathbf{P}_{[1|0]}$

Previsão

Estado

$$\hat{\mathbf{x}}_{[n+1|n]} = \mathbf{A}\hat{\mathbf{x}}_{[n|n]} + \mathbf{B}\mathbf{u}_{[n]}$$

Covariancia

$$\mathbf{P}_{[n+1|n]} = \mathbf{A}\mathbf{P}_{[n|n]}\mathbf{A}^T + \mathbf{Q}_{[n]}$$

Atualização

Medição

$$\hat{\mathbf{y}}_{[n|n-1]} = \mathbf{C}\hat{\mathbf{x}}_{[n|n-1]}$$

Ganho

$$\mathbf{K}_{[n]} = \mathbf{P}_{[n|n-1]}\mathbf{C}^T(\mathbf{C}\mathbf{P}_{[n|n-1]}\mathbf{C}^T + \mathbf{R}_{[n]})^{-1}$$

Estado

$$\hat{\mathbf{x}}_{[n|n]} = \hat{\mathbf{x}}_{[n|n-1]} + \mathbf{K}_{[n]}\left(\mathbf{y}_{[n]} - \hat{\mathbf{y}}_{[n|n-1]}\right).$$

Covariancia

$$\mathbf{P}_{[n|n]} = (\mathbf{I} - \mathbf{K}_{[n]}\mathbf{C})\mathbf{P}_{[n|n-1]}$$

Estimação de estados: caso não–linear

Utilizando os sinais de saída que estão contaminados por sinais de ruído aleatórios, os sinais de entrada, as funções matriciais $\mathbf{f}$, $\mathbf{g}$, e as covariâncias $\mathbf{Q}$ e $\mathbf{R}$ é possível fornecer uma estimativa razoável para $\mathbf{x}[n]$?

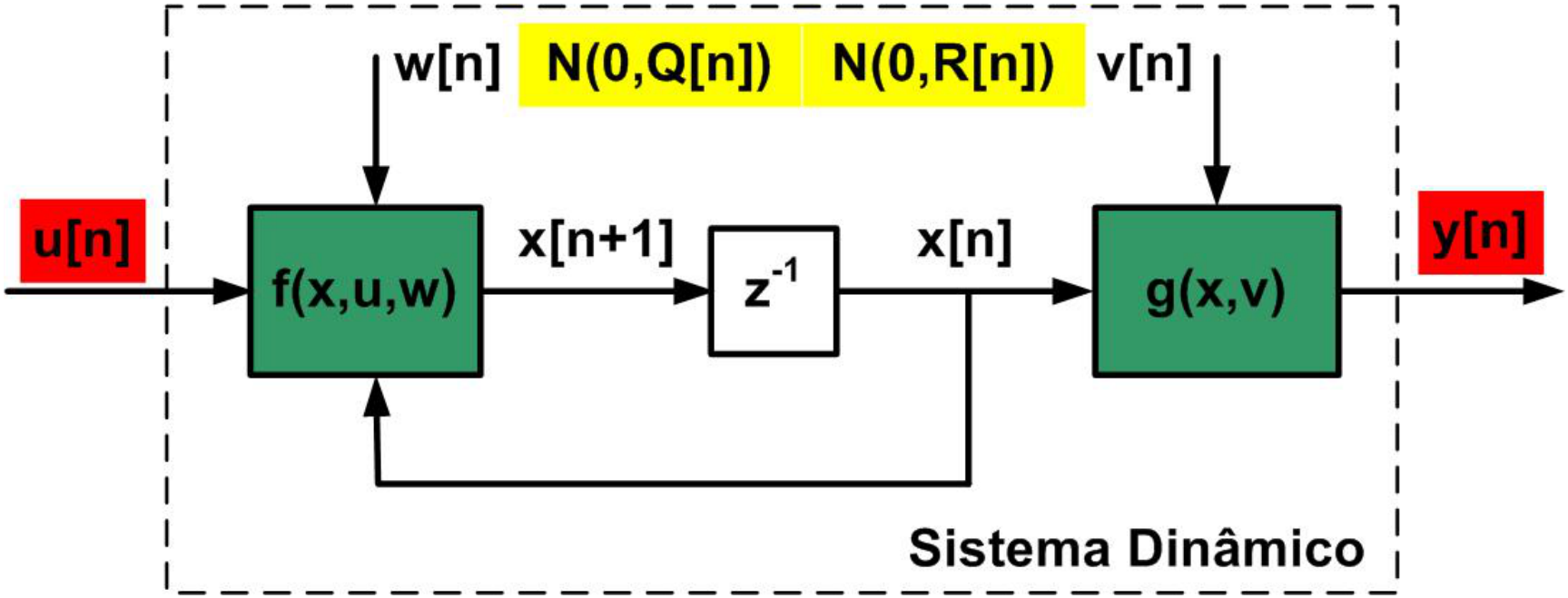

Filtro estendido

$$\boxed{\begin{aligned} \mathbf{x}_{[n+1]} &= \mathbf{f}\left(\mathbf{x}_{[n]}, \mathbf{u}_{[n]}, \mathbf{w}_{[n]}\right), \\ \mathbf{y}_{[n]} &= \mathbf{g}\left(\mathbf{x}_{[n]}, \mathbf{v}_{[n]}\right), \end{aligned}}$$

$$\mathbf{x}_{[0]} = \mathbf{x}_0,$$

$$\mathbf{w}_{[n]} \in N(0, \mathbf{Q}_{[n]}),$$

$$\mathbf{v}_{[n]} \in N(0, \mathbf{R}_{[n]}),$$

$$\mathbf{Q}_{[n]} = \mathrm{cov}\left(\mathbf{w}_{[n]}\right)$$

$$\mathbf{R}_{[n]} = \mathrm{cov}\left(\mathbf{v}_{[n]}\right).$$

Covariância e ganho

$$\mathbf{P}_{[n|n]} = \text{cov}\left\{\mathbf{x}_{[n]} - \hat{\mathbf{x}}_{[n|n]}\right\}$$

$$\mathbf{P}_{[n|n]} = \mathbf{P}_{[n|n-1]} - \mathbf{K}_{[n]}\mathbf{G}_{[n]}\mathbf{P}_{[n|n-1]}$$

$$\mathbf{K}_{[n]} = \mathbf{P}_{[n|n-1]}\mathbf{G}_{[n]}^T\left(\mathbf{G}_{[n]}\mathbf{P}_{[n|n-1]}\mathbf{G}_{[n]}^T + \mathbf{\Lambda}_{[n]}\mathbf{R}_{[n]}\mathbf{\Lambda}_{[n]}^T\right)^{-1}$$

$$\mathbf{G}_{[n]} = \frac{\partial \mathbf{g}}{\partial \mathbf{x}}\bigg|_{\hat{\mathbf{x}}_{[n|n]},\mathbf{0}}$$

$$\mathbf{\Lambda}_{[n]} = \frac{\partial \mathbf{g}}{\partial \mathbf{v}}\bigg|_{\hat{\mathbf{x}}_{[n|n]},\mathbf{0}}$$

$$\hat{\mathbf{y}}_{[n|n-1]} = \mathbf{g}\left(\hat{\mathbf{x}}_{[n|n-1]}, \mathbf{0}\right)$$

$$\hat{\mathbf{x}}_{[n|n]} = \hat{\mathbf{x}}_{[n|n-1]} + \mathbf{K}_{[n]}\left(\mathbf{y}_{[n]} - \hat{\mathbf{y}}_{[n|n-1]}\right)$$

Previsão

$$\mathbf{P}_{[n+1|n]} = \text{cov}\left\{\mathbf{x}_{[n+1]} - \hat{\mathbf{x}}_{[n+1|n]}\right\}$$

$$\hat{\mathbf{x}}_{[n+1|n]} = \mathbf{f}\left(\hat{\mathbf{x}}_{[n|n]}, \mathbf{u}_{[n]}, \mathbf{0}\right)$$

$$\mathbf{P}_{[n+1|n]} = \mathbf{F}_{[n]}\mathbf{P}\mathbf{F}_{[n]}^T + \mathbf{\Gamma}_{[n]}\mathbf{Q}_{[n]}\mathbf{\Gamma}_{[n]}^T$$

$$\mathbf{F}_{[n]} = \frac{\partial \mathbf{f}}{\partial \mathbf{x}}\bigg|_{\hat{\mathbf{x}}_{[n|n]}, \mathbf{u}_{[n]}, \mathbf{0}}$$

$$\mathbf{\Gamma}_{[n]} = \frac{\partial \mathbf{f}}{\partial \mathbf{w}}\bigg|_{\hat{\mathbf{x}}_{[n|n]}, \mathbf{u}_{[n]}, \mathbf{0}}$$

Linearização

$$\mathbf{G}_{[n]} = \frac{\partial \mathbf{g}}{\partial \mathbf{x}} \Big|_{\hat{\mathbf{x}}_{[n|n]},\mathbf{0}} \rightarrow \mathbf{C}$$

$$\mathbf{\Lambda}_{[n]} = \frac{\partial \mathbf{g}}{\partial \mathbf{v}} \Big|_{\hat{\mathbf{x}}_{[n|n]},\mathbf{0}} \rightarrow \mathbf{\Lambda R \Lambda}^T$$

$$\mathbf{F}_{[n]} = \frac{\partial \mathbf{f}}{\partial \mathbf{x}} \Big|_{\hat{\mathbf{x}}_{[n|n]},\mathbf{u}_{[n]},\mathbf{0}} \rightarrow \mathbf{A}$$

$$\mathbf{\Gamma}_{[n]} = \frac{\partial \mathbf{f}}{\partial \mathbf{w}} \Big|_{\hat{\mathbf{x}}_{[n|n]},\mathbf{u}_{[n]},\mathbf{0}} \rightarrow \mathbf{\Gamma Q \Gamma}^T$$

Algoritmo estendido - $\hat{\mathbf{x}}_{[1|0]}, \mathbf{P}_{[1|0]}$

Previsão

Estado

$$\hat{\mathbf{x}}_{[n+1|n]} = \mathbf{f}\left(\hat{\mathbf{x}}_{[n|n]}, \mathbf{u}_{[n]}, \mathbf{0}\right)$$

Covariancia

$$\mathbf{P}_{[n+1|n]} = \mathbf{F}_{[n]}\mathbf{P}\mathbf{F}_{[n]}^T + \mathbf{\Gamma}_{[n]}\mathbf{Q}_{[n]}\mathbf{\Gamma}_{[n]}^T$$

Atualização

Previsão

$$\hat{\mathbf{y}}_{[n|n-1]} = \mathbf{g}\left(\hat{\mathbf{x}}_{[n|n-1]}, \mathbf{0}\right)$$

Ganho

$$\mathbf{K}_{[n]} = \mathbf{P}_{[n|n-1]}\mathbf{G}_{[n]}^T\left(\mathbf{G}_{[n]}\mathbf{P}_{[n|n-1]}\mathbf{G}_{[n]}^T + \mathbf{\Lambda}_{[n]}\mathbf{R}_{[n]}\mathbf{\Lambda}_{[n]}^T\right)^{-1}$$

Estado

$$\hat{\mathbf{x}}_{[n|n]} = \hat{\mathbf{x}}_{[n|n-1]} + \mathbf{K}_{[n]}\left(\mathbf{y}_{[n]} - \hat{\mathbf{y}}_{[n|n-1]}\right).$$

Covariancia

$$\mathbf{P}_{[n|n]} = \mathbf{P}_{[n|n-1]} - \mathbf{K}_{[n]}\mathbf{G}_{[n]}\mathbf{P}_{[n|n-1]}$$

Nonlinear model - continous time
Differential equation

$$\dot{\mathbf{x}} = \mathbf{f}\left(\mathbf{x}\left(t\right), \mathbf{u}\left(t\right)\right)$$

Discrete time

$$t_k = t \in \left[kT, \left(k+1\right)T\right], k = 0, 1, 2, \cdots$$

Solving the equation

$$\mathbf{x}\left(t\right) = \mathbf{x}\left(kT\right) + \int_{kT}^{t} \mathbf{f}\left(\mathbf{x}\left(\lambda\right), \mathbf{u}\left(\lambda\right)\right) d\lambda$$

Zero order hold

$$\mathbf{u}\left(t\right) = \mathbf{u}\left(kT\right), kT < t < \left(k+1\right)T$$

Solution

$$\mathbf{x}(t) = \mathbf{x}(kT) + \int_{kT}^{t} \mathbf{f}(\mathbf{x}(\lambda), \mathbf{u}(kT))\, d\lambda$$

$$\mathbf{x}((k+1)T) = \mathbf{x}(kT) + \int_{kT}^{(k+1)T} \mathbf{f}(\mathbf{x}(\lambda), \mathbf{u}(kT))\, d\lambda$$

Complete solution

$$\mathbf{\Phi}(T, \mathbf{x}(\lambda), \mathbf{u}(kT)) = \int_{kT}^{(k+1)T} \mathbf{f}(\mathbf{x}(\lambda), \mathbf{u}(kT))\, d\lambda$$

Discrete-time unicycle kinematic model - approximate

$$\begin{bmatrix} \dot{x} \\ \dot{y} \\ \dot{\theta} \end{bmatrix} = \begin{bmatrix} \upsilon \cos\theta \\ \upsilon \sin\theta \\ \omega \end{bmatrix}$$

$$\mathbf{f}\left(\mathbf{x}\left(t\right), \mathbf{u}\left(t\right)\right) = \begin{bmatrix} \cos\theta\left(t\right) & 0 \\ \sin\theta\left(t\right) & 0 \\ 0 & 1 \end{bmatrix} \begin{bmatrix} \upsilon\left(t\right) \\ \omega\left(t\right) \end{bmatrix}$$

$$\mathbf{\Phi}\left(T, \mathbf{x}\left(\lambda\right), \mathbf{u}\left(kT\right)\right) = T\mathbf{f}\left(\mathbf{x}\left(kT\right), \mathbf{u}\left(kT\right)\right)$$

Discrete-time

$$\begin{bmatrix} x_{[n+1]} \\ y_{[n+1]} \\ \theta_{[n+1]} \end{bmatrix} = \begin{bmatrix} x_{[n]} \\ y_{[n]} \\ \theta_{[n]} \end{bmatrix} + T \begin{bmatrix} \cos\theta_{[n]} & 0 \\ \sin\theta_{[n]} & 0 \\ 0 & 1 \end{bmatrix} \begin{bmatrix} \upsilon_{[n]} \\ \omega_{[n]} \end{bmatrix}$$

Filtro estocástico

$$\mathbf{x}_{[n+1]} = \mathbf{f}\left(\mathbf{x}_{[n]}, \mathbf{u}_{[n]}, \mathbf{w}_{[n]}\right),$$

$$\mathbf{y}_{[n]} = \mathbf{g}\left(\mathbf{x}_{[n]}, \mathbf{v}_{[n]}\right),$$

$$\mathbf{f}\left(\mathbf{x}_{[n]}, \mathbf{u}_{[n]}, \mathbf{w}_{[n]}\right) = \begin{bmatrix} x_{[n]} + w^{x}_{[n]} \\ y_{[n]} + w^{y}_{[n]} \\ \theta_{[n]} + w^{\theta}_{[n]} \end{bmatrix} + T \begin{bmatrix} \cos\left(\theta_{[n]} + w^{\theta}_{[n]}\right) & 0 \\ \sin\left(\theta_{[n]} + w^{\theta}_{[n]}\right) & 0 \\ 0 & 1 \end{bmatrix} \begin{bmatrix} \upsilon_{[n]} \\ \omega_{[n]} \end{bmatrix}$$

$$\mathbf{g}\left(\mathbf{x}_{[n]}, \mathbf{v}_{[n]}\right) = \begin{bmatrix} x_{[n]} + v^{x}_{[n]} \\ y_{[n]} + v^{y}_{[n]} \\ \theta_{[n]} + v^{\theta}_{[n]} \end{bmatrix}$$

Jacobiano

$$\mathbf{f}(\mathbf{x}) = \begin{bmatrix} \mathbf{f}_1(\mathbf{x}) \\ \vdots \\ \mathbf{f}_p(\mathbf{x}) \end{bmatrix}, \mathbf{g}(\mathbf{x}) = \begin{bmatrix} \mathbf{g}_1(\mathbf{x}) \\ \vdots \\ \mathbf{g}_q(\mathbf{x}) \end{bmatrix}$$

$$\frac{\partial \mathbf{f}}{\partial \mathbf{x}} = \begin{bmatrix} \frac{\partial \mathbf{f}_1(\mathbf{x})}{\partial x_1} & \dots & \frac{\partial \mathbf{f}_1(\mathbf{x})}{\partial x_p} \\ \vdots & \dots & \vdots \\ \frac{\partial \mathbf{f}_m(\mathbf{x})}{\partial x_1} & \dots & \frac{\partial \mathbf{f}_m(\mathbf{x})}{\partial x_p} \end{bmatrix}_{p \times p}, \frac{\partial \mathbf{g}}{\partial \mathbf{x}} = \begin{bmatrix} \frac{\partial \mathbf{g}_1(\mathbf{x})}{\partial x_1} & \dots & \frac{\partial \mathbf{g}_1(\mathbf{x})}{\partial x_p} \\ \vdots & \dots & \vdots \\ \frac{\partial \mathbf{g}_q(\mathbf{x})}{\partial x_1} & \dots & \frac{\partial \mathbf{g}_q(\mathbf{x})}{\partial x_p} \end{bmatrix}_{q \times p}$$

$$\mathbf{x} = \begin{bmatrix} x_1 \\ \vdots \\ x_p \end{bmatrix}$$

Filtro estocastico

$$\mathbf{F}_{[n]} = \frac{\partial \mathbf{f}}{\partial \mathbf{x}}\Big|_{\hat{\mathbf{x}}_{[n|n]},\mathbf{u}_{[n]},\mathbf{0}} = \begin{bmatrix} 1 & 0 & -T\sin\left(\theta_{[n]}\right)\upsilon_{[n]} \\ 0 & 1 & T\cos\left(\theta_{[n]}\right)\upsilon_{[n]} \\ 0 & 0 & 1 \end{bmatrix}$$

$$\mathbf{G}_{[n]} = \frac{\partial \mathbf{g}}{\partial \mathbf{x}}\Big|_{\hat{\mathbf{x}}_{[n|n]},\mathbf{0}} = \begin{bmatrix} 1 & 0 & 0 \\ 0 & 1 & 0 \\ 0 & 0 & 1 \end{bmatrix}$$

$$\mathbf{\Lambda}_{[n]} = \frac{\partial \mathbf{g}}{\partial \mathbf{v}}\Big|_{\hat{\mathbf{x}}_{[n|n]},\mathbf{0}} = \begin{bmatrix} 1 & 0 & 0 \\ 0 & 1 & 0 \\ 0 & 0 & 1 \end{bmatrix}$$

$$\mathbf{\Gamma}_{[n]} = \frac{\partial \mathbf{f}}{\partial \mathbf{w}}\Big|_{\hat{\mathbf{x}}_{[n|n]},\mathbf{u}_{[n]},\mathbf{0}} = \begin{bmatrix} 1 & 0 & -T\sin\left(\theta_{[n]}\right)\upsilon_{[n]} \\ 0 & 1 & T\cos\left(\theta_{[n]}\right)\upsilon_{[n]} \\ 0 & 0 & 1 \end{bmatrix}$$

Covariancia

$$\dot{\mathbf{x}}(t) = \mathbf{A}\mathbf{x}(t) + \mathbf{w}(t)$$

$$\mathrm{E}\left\{\left(\mathbf{w}(t) - \underbrace{\mathrm{E}\{\mathbf{w}(t)\}}_{=0}\right)\left(\mathbf{w}(\tau) - \underbrace{\mathrm{E}\{\mathbf{w}(\tau)\}}_{=0}\right)^T\right\} = \mathbf{Q}(t)\,\delta(t-\tau)$$

$$\mathbf{x}_{t_{k+1}} = \mathbf{\Phi}(t_{k+1}, t_k)\,\mathbf{x}_{t_k} + \mathbf{w}_k$$

$$\mathrm{E}\left\{\mathbf{w}_k \mathbf{w}_k^T\right\} = \mathbf{Q}_k$$

$$\mathbf{x}(t_{k+1}) = \underbrace{\mathbf{e}^{\mathbf{A}(t_{k+1}-t_k)}}_{\mathbf{\Phi}(t_{k+1},t_k)}\mathbf{x}(t_k)$$

$$\mathbf{x}(t_{k+1}) = \mathbf{\Phi}(t_{k+1}, t_k)\,\mathbf{x}(t_k) + \underbrace{\int_{t_k}^{t_{k+1}} \mathbf{\Phi}(t_{k+1}, \tau)\,\mathbf{w}(\tau)\,d\tau}_{\mathbf{w}_k}$$

Covariancia ....

$$
\begin{aligned}
\mathbf{Q}_k &= \mathrm{E}\left\{\mathbf{w}_k \mathbf{w}_k^T\right\} \\
\mathbf{Q}_k &= \mathrm{E}\left\{\int_{t_k}^{t_{k+1}} \int_{t_k}^{t_{k+1}} \mathbf{\Phi}\left(t_{k+1},\tau\right)\mathbf{w}\left(\tau\right)\left[\mathbf{\Phi}\left(t_{k+1},\tau\right)\mathbf{w}\left(\alpha\right)\right]^T d\tau d\alpha\right\} \\
\mathbf{Q}_k &= \mathrm{E}\left\{\int_{t_k}^{t_{k+1}} \int_{t_k}^{t_{k+1}} \mathbf{\Phi}\left(t_{k+1},\tau\right)\mathbf{w}\left(\tau\right)\mathbf{w}\left(\alpha\right)^T \mathbf{\Phi}^T\left(t_{k+1},\tau\right) d\tau d\alpha\right\} \\
\mathbf{Q}_k &= \int_{t_k}^{t_{k+1}} \int_{t_k}^{t_{k+1}} \mathbf{\Phi}\left(t_{k+1},\tau\right) \underbrace{\mathrm{E}\left\{\mathbf{w}\left(\tau\right)\mathbf{w}\left(\alpha\right)^T\right\}}_{\mathbf{Q}(\tau)\delta(\tau-\alpha)} \mathbf{\Phi}^T\left(t_{k+1},\tau\right) d\tau d\alpha
\end{aligned}
$$

$$
\mathbf{Q}_k = \int_{t_k}^{t_{k+1}} \mathbf{\Phi}\left(t_{k+1},\tau\right)\mathbf{Q}\left(\tau\right)\mathbf{\Phi}^T\left(t_{k+1},\tau\right) d\tau
$$